Texas Scenic Co.

Theatrical stage equipment that stands behind a professional performance.

inline©

STAGE EQUIPMENT

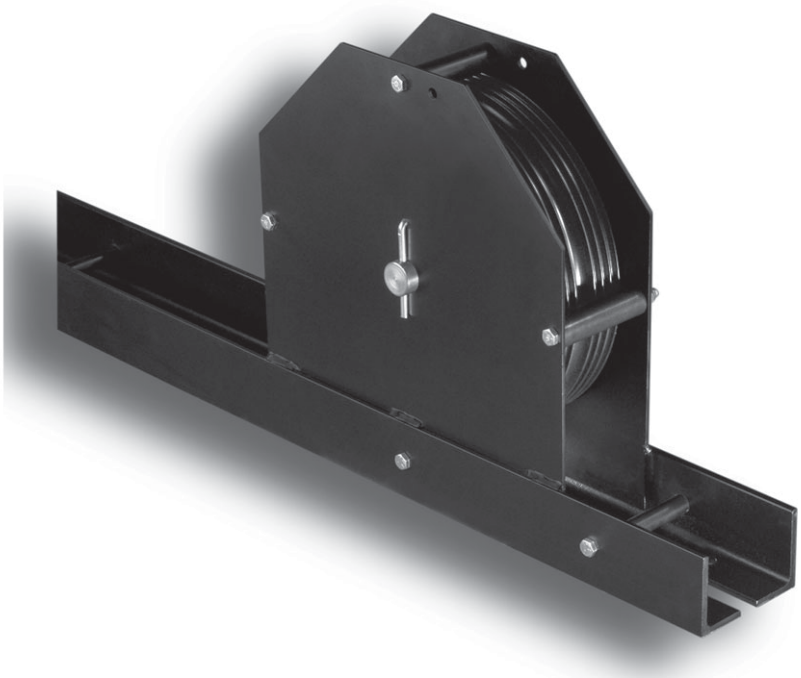

Steel Head Block

Standard Features
2500 lb. capacity
12 5/8" pitch diameter
Steel composite sheave
1 1/4" plated cold rolled shaft
1 1/4" tapered roller bearings
7 gauge side plates
2" x 3" x 1/4" base angles
One 3/4" rope groove
Seven 1/4" cable grooves
3/8" steel plate beam clips, 3 per block
Components powder coated prior to assembly

Optional Features
Extended length side plates
8, 9, 10 or 11 line set configuration
7/8" or 1" rope grooves

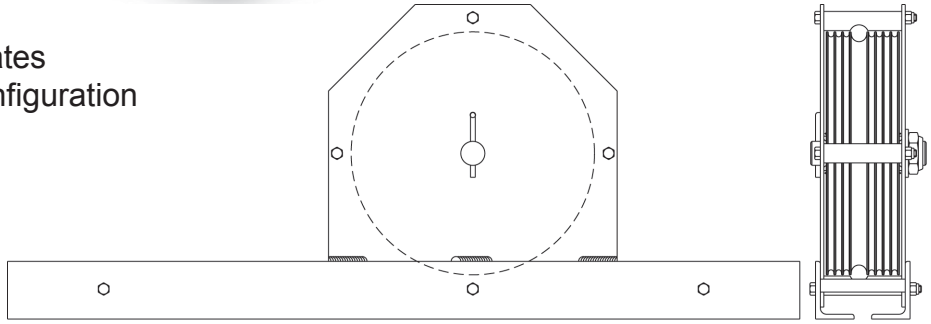

For complete specifications, call 800-292-7490.

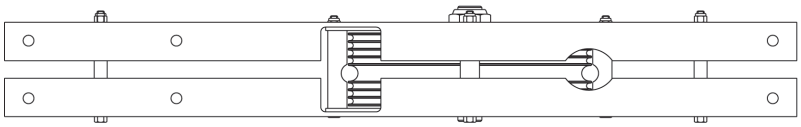

Texas Scenic Company, Inc., 5423 Jackwood Dr., San Antonio, TX 78238 210-684-0091 800-292-7490
www.texasscenic.com